© DEN HARTOG INDUSTRIES, INC.

Copyright. All information furnished within this document, electronic file or design correspondence is the property of Den Hartog Industries, Inc. and shall not be used, disclosed to others or copied without the expressed written consent of Den Hartog Industries, Inc.

FS0125–32 A

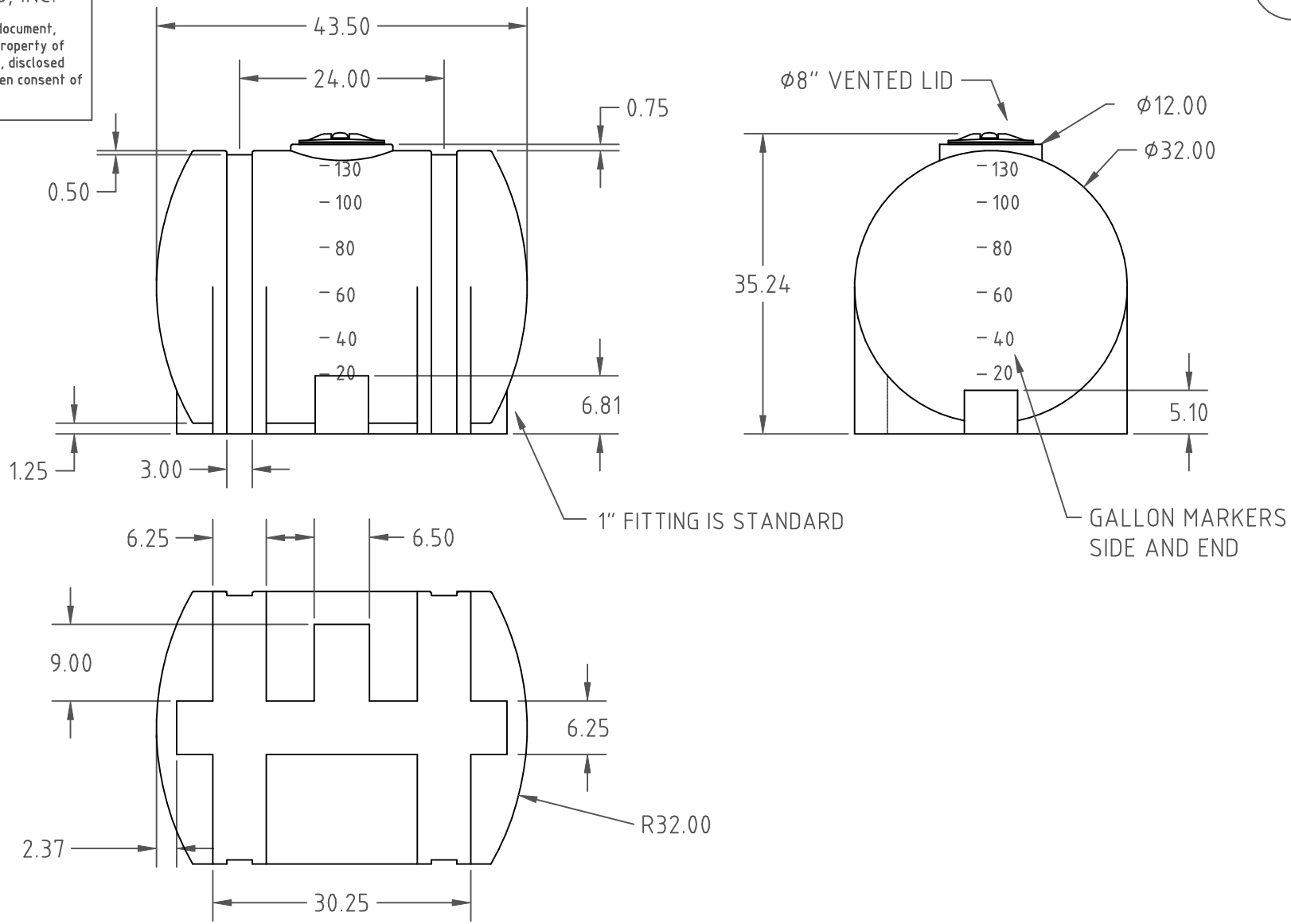

REV	DESCRIPTION	DATE	APPRD	
A	52 WAS 56 / ADDED FITTING CCN 1769	REH	12/29/08	

ALL DIMENSIONS ARE IN DECIMAL INCHES
TOLERANCES UNLESS OTHERWISE SPECIFIED
± 1% @ 68° F

DRAWN / DATE
DHJ 3/10/94

APPRD. / DATE
ADH 11/9/07

THIRD ANGLE PROJECTION
ANSI 14.5M

MATERIAL

HDPE OR EQUIVALENT
REFERENCE MATERIAL DATA SHEET
FOR SPECIFIC PROPERTIES.

NOTES:
1. SHOT WEIGHT 52 LBS. (A)
2. BLACK, GREEN, WHITE
OR YELLOW COLOR

ACE ROTO–MOLD
A DIVISION OF DEN HARTOG INDUSTRIES, INC.
4010 HOSPERS DRIVE S., BOX425, HOSPERS, IA. 51238

CLIENT / DESCRIPTION
125 GALLON LEG TANK

SCALE
N.S.

PART NO.
FS0125–32